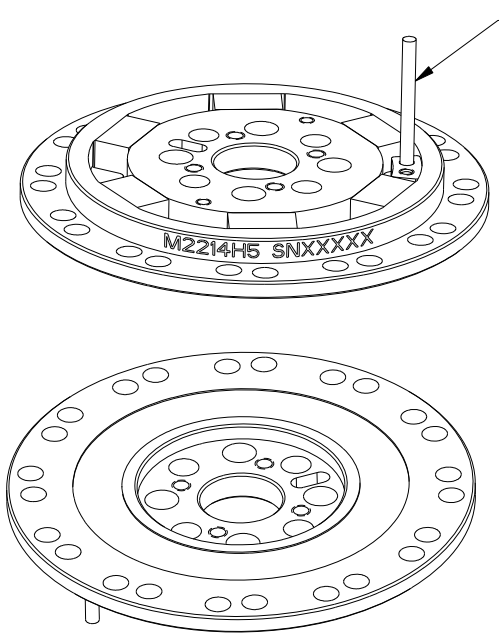

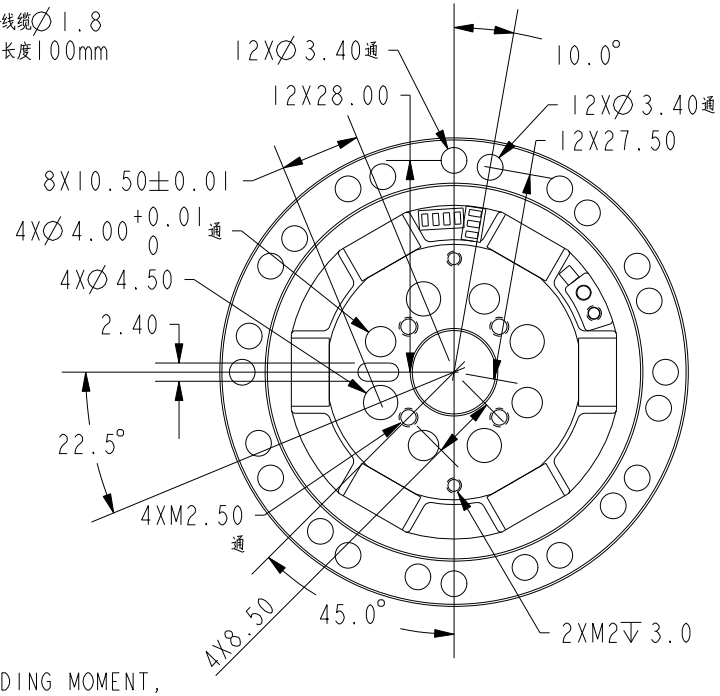

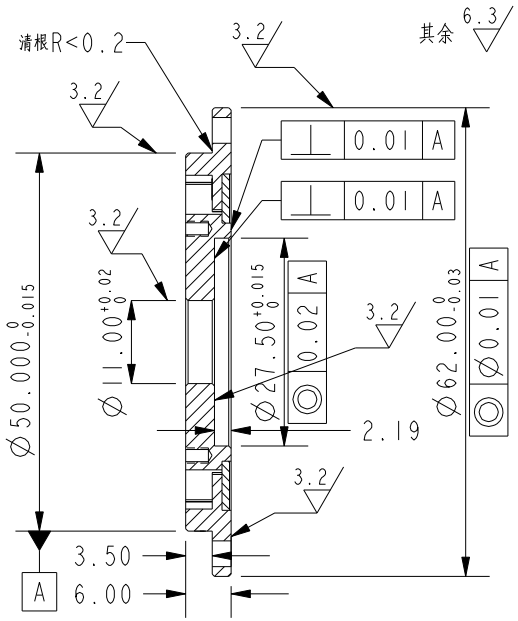

NOTE: THE OVERLOAD CAPACITIES FOR BENDING MOMENT, AXIAL AND RADIAL FORCE EXCEED 300% OF THOSE USED FOR CROSSTALK MEASUREMENT

SPECIFICATIONS	
CAPACITY (Nm)	200
OVERLOAD CAPACITY (%F.S.)	300
OUTPUT @ F.S. (mv/V)	2±0.2
POWER SUPPLY (V)	3.5-12
BRIDGE RESISTANCE (Ω) NOMINAL	350
NON-LINEARITY (%F.S.)	0.5
HYSTERESIS (%F.S.)	1.0
OPERATING TEMP. RANGE (°C)	-20 TO +85
CROSSTALK (%F.S.)	1.0
AXIAL FORCE FOR CROSSTALK (N)	200
RADIAL FORCE FOR CROSSTALK (N)	400
BENDING MOMENT FOR CROSSTALK (Nm)	50
TORSION ANGLE (CALCULATED)	0.05°
TORSIONAL STIFFNESS (KNm/RAD)	110
BENDING STIFFNESS (KNm/RAD)	23
MASS (Kg)	0.09

WIRING CODE	
COLOR	FUNCTION
RED	+EX
GREEN	+SIG
BLACK	GND
WHITE	-SIG

DRAWING IN THIRD ANGLE PROJECTION

SUNRISE INSTRUMENTS

www.srisensor.com

SINGLE AXIS TORQUE LOADCELL
D62MM, 200 Nm

UNLESS OTHERWISE SPECIFIED DIMENSIONS ARE IN MM	M2214H5	REV. A