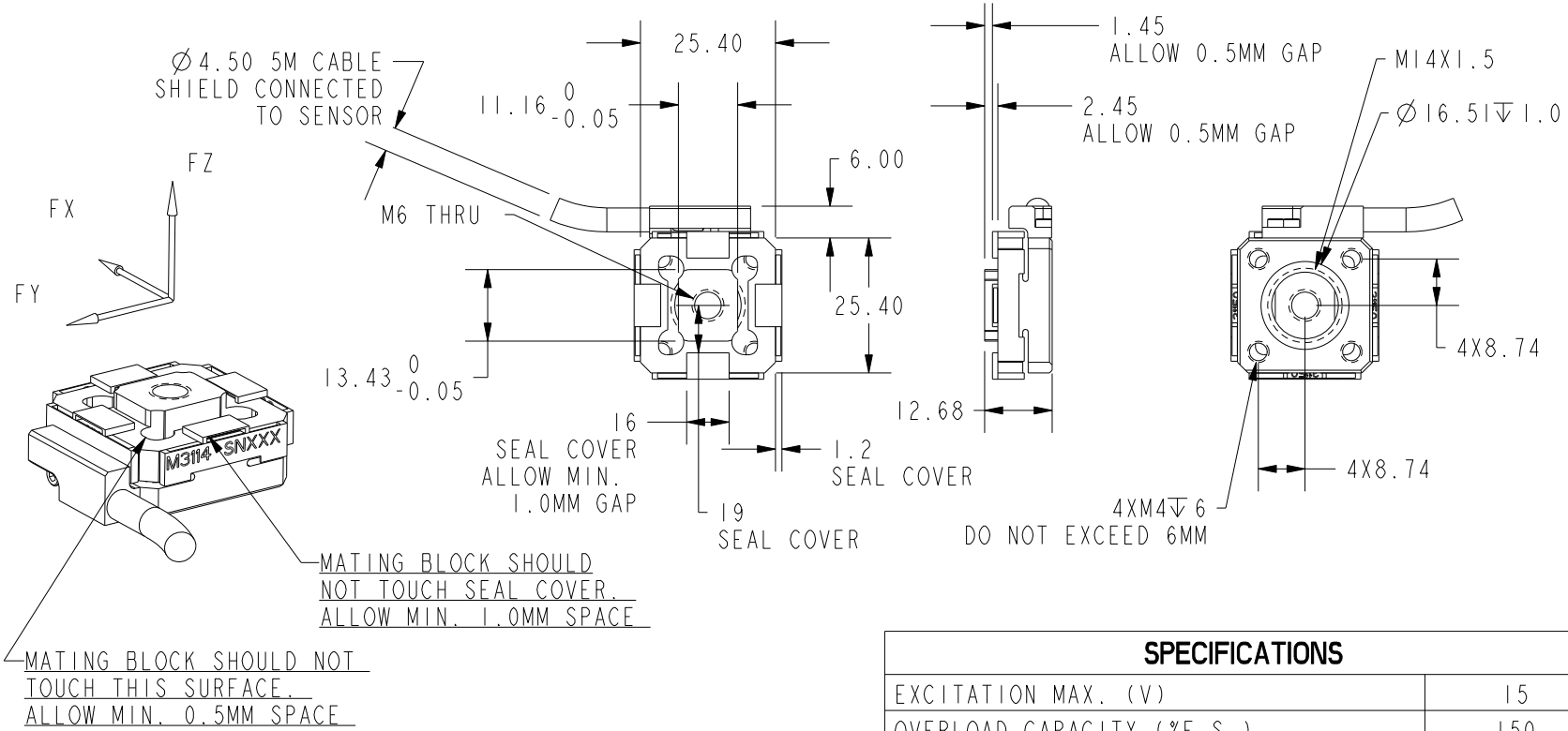

ALL CHANNELS ARE STRUCTURALLY DECOUPLED
NO DECOUPLING ALGORITHM REQURED
STANDARD DATA AQUISITION SYSTEM CAN BE USED

	Fx	Fy	Fz	Mx	My	Mz
CAPACITY (N)	4500	4500	4500	NA	NA	NA
OUTPUT (mV/V)	1.7	2.3	2.5	NA	NA	NA
BRIDGE RES. (Ω)	350	350	350	NA	NA	NA

SPECIFICATIONS

EXCITATION MAX. (V)	15
OVERLOAD CAPACITY (%F.S.)	150
FREE AIR RESONANT FREQ. (HZ.)	7500
CROSSTALK (%F.S.)	2.0
NON-LINEARITY (%F.S.)	0.5
HYSTERESIS (%F.S.)	0.5
OPERATING TEMP. RANGE (°C)	-40 TO +100
COMPENSATED TEMP. RANGE (°C)	10 TO 70
MASS (KG)	0.08

WIRING CODE - TWISTED PAIR WIRES

Fx		Fy		Fz	
COLOR	**FUNCTION**	**COLOR**	**FUNCTION**	**COLOR**	**FUNCTION**
RED(BLACK)	+EXC.	RED(BROWN)	+EXC.	ORANGE(BLACK)	+EXC.
BLACK(RED)	-EXC.	BROWN(RED)	-EXC.	BLACK(ORANGE)	-EXC.
YELLOW(BROWN)	+SIG.	BLUE(BROWN)	+SIG.	YELLOW(BLACK)	+SIG.
BROWN(YELLOW)	-SIG.	BROWN(BLUE)	-SIG.	BLACK(YELLOW)	-SIG.

SUNRISE INSTRUMENTS

www.srisensor.com

THREE AXIS SQUARE LOAD CELL
4500N CAPACITY

UNLESS OTHERWISE SPECIFIED DIMENSIONS ARE IN MM	M3114	REV. B